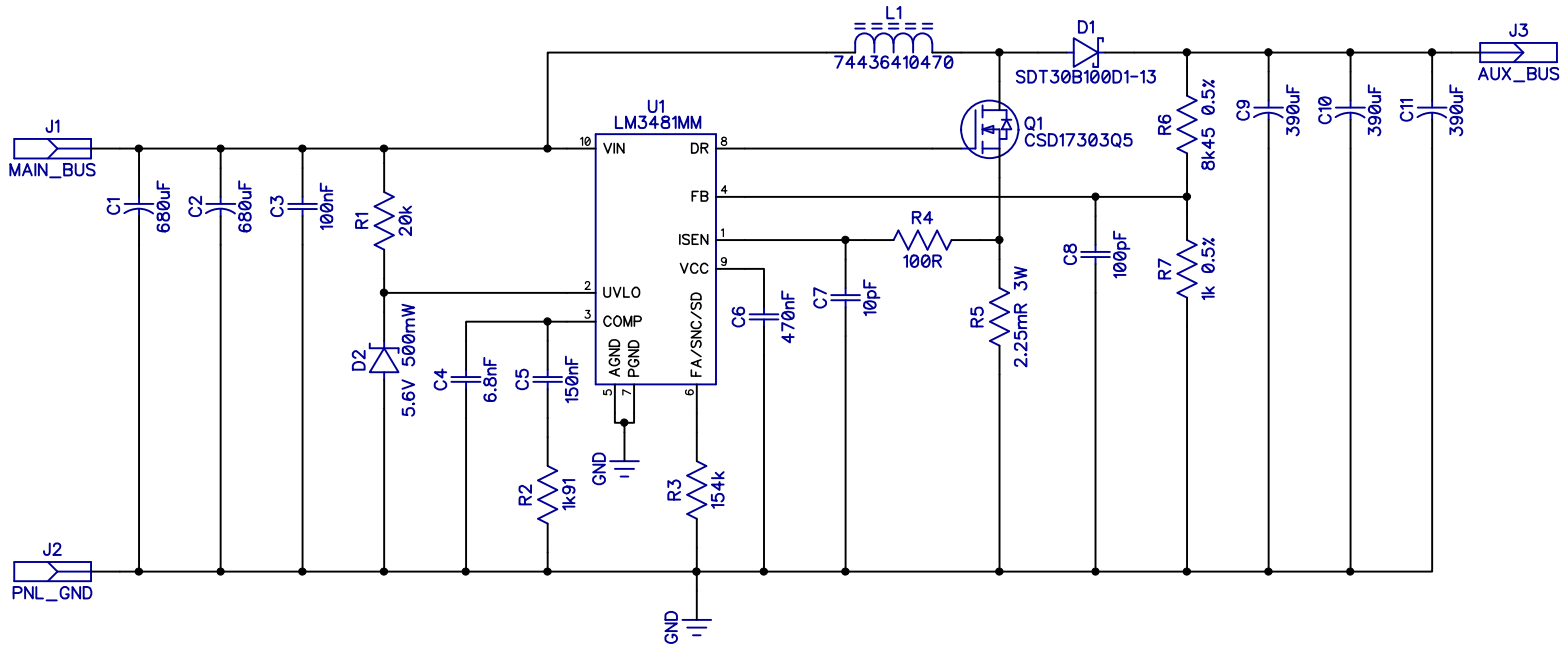

Title:	Rev:
Brown-Out Prevention DC-DC Boost Converter	B
	Size: 11x8.5
Date: 27 Jan 2021	Drawn by: EP
	Sheet: 1 of 1