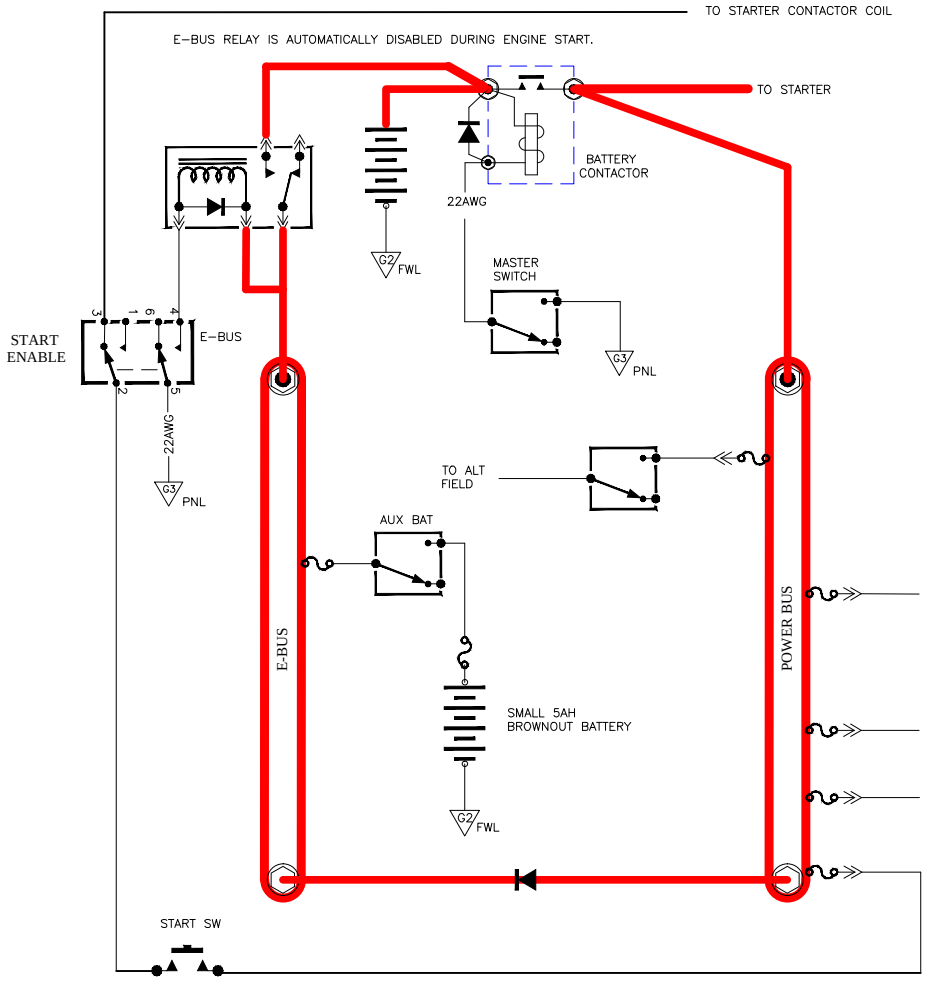
TO STARTER CONTACTOR COIL
E–BUS RELAY IS AUTOMATICALLY DISABLED DURING ENGINE START.
TO STARTER
BATTERY CONTACTOR
22AWG
G2
FWL
MASTER SWITCH
G3
PNL
START ENABLE
E–BUS
3
1
6
4
2
5
22AWG
G3
PNL
TO ALT FIELD
AUX BAT
E-BUS
POWER BUS
SMALL 5AH BROWNOUT BATTERY
G2
FWL
START SW