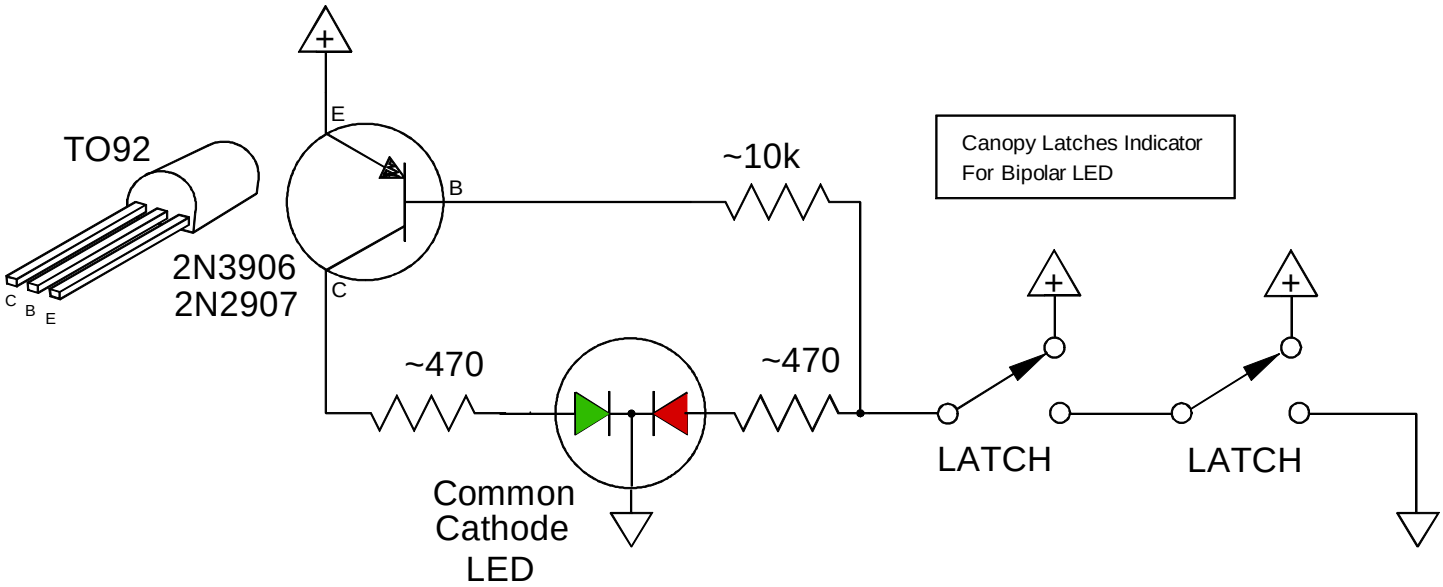
TO92
C
B
E
2N3906
2N2907
E
B
C
~10k
Canopy Latches Indicator
For Bipolar LED
~470
~470
Common
Cathode
LED
LATCH
LATCH