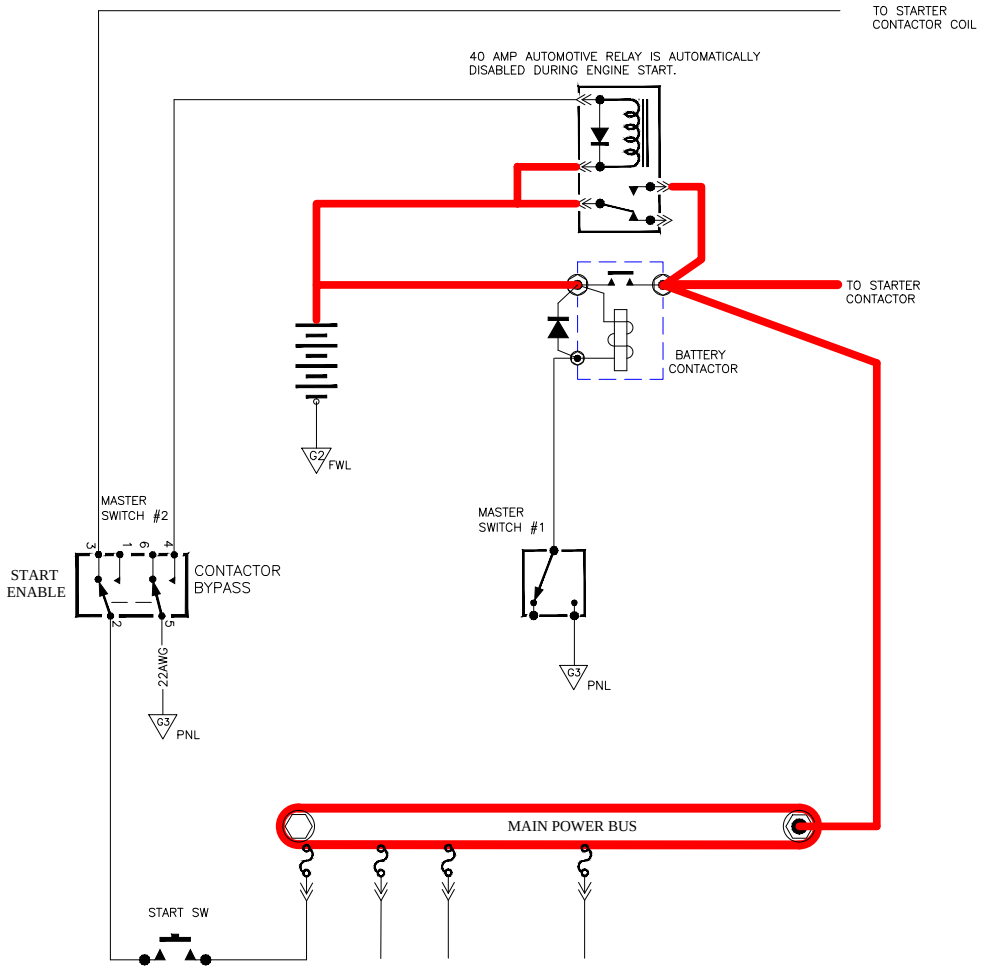
TO STARTER
CONTACTOR COIL
40 AMP AUTOMOTIVE RELAY IS AUTOMATICALLY
DISABLED DURING ENGINE START.
TO STARTER
CONTACTOR
BATTERY
CONTACTOR
G2
FWL
MASTER
SWITCH #2
START
ENABLE
CONTACTOR
BYPASS
22AWG
G3
PNL
MASTER
SWITCH #1
G3
PNL
MAIN POWER BUS
START SW