The 0% TO 100% DUTY CYCLE corresponds
to V-IN values of 1.25V and 2.65V, typical.

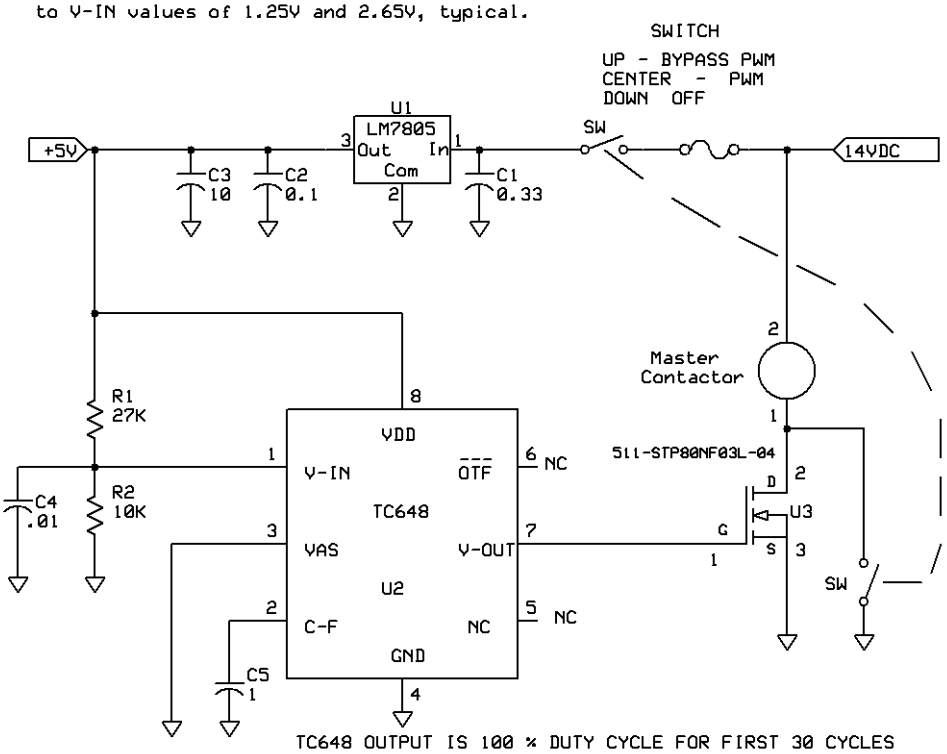

TC648 OUTPUT IS 100 % DUTY CYCLE FOR FIRST 30 CYCLES