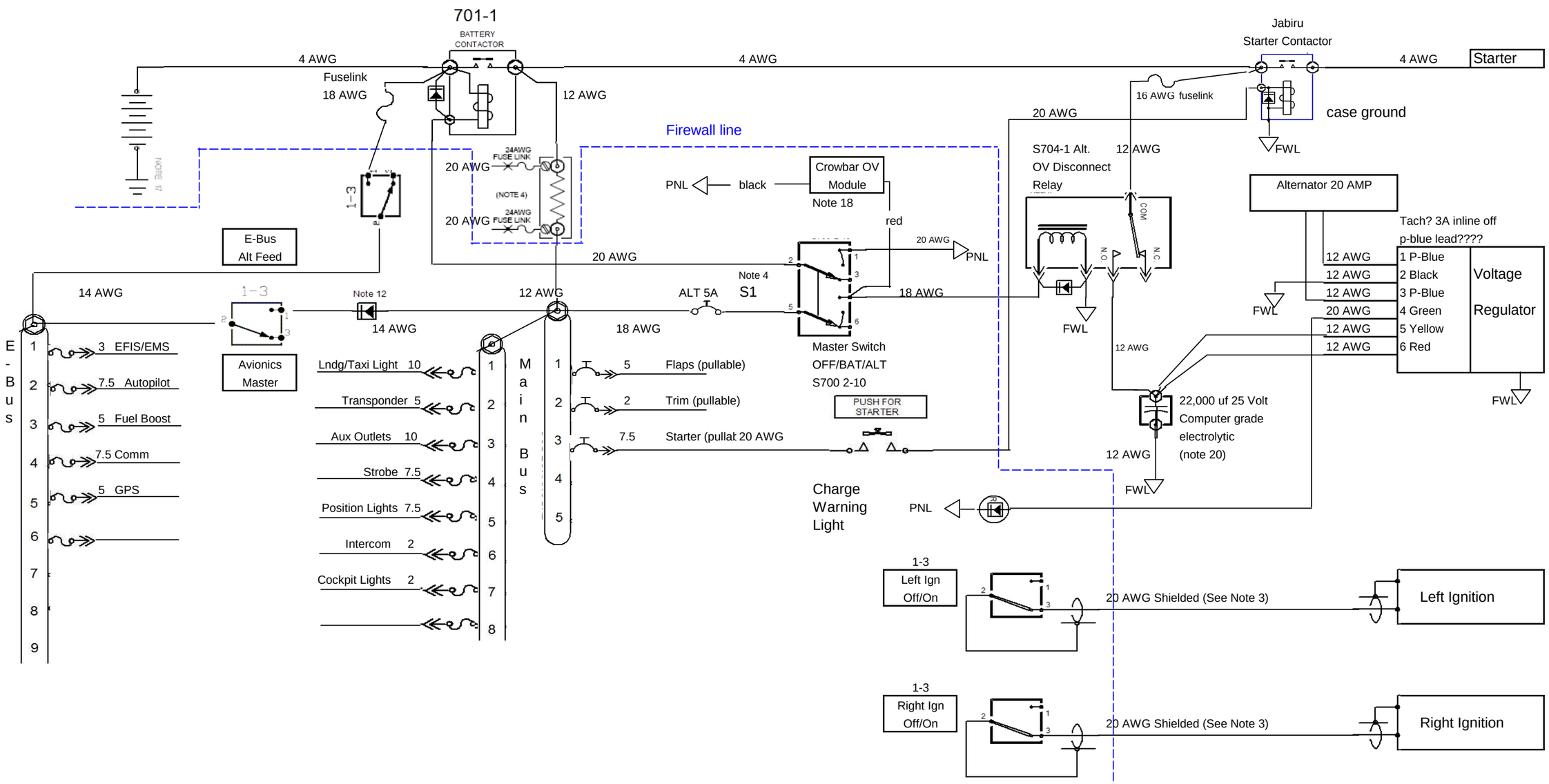
701-1
BATTERY CONTACTOR
4 AWG
Fuselink
18 AWG
4 AWG
12 AWG
Jabiru
Starter Contactor
4 AWG
Starter
16 AWG fuselink
case ground
FWL
20 AWG
Firewall line
S704-1 Alt.
OV Disconnect
Relay
12 AWG
Alternator 20 AMP
24AWG FUSE LINK
20 AWG
(NOTE 4)
20 AWG
PNL
black
Crowbar OV
Module
Note 18
red
E-Bus
Alt Feed
20 AWG
20 AWG
PNL
Tach? 3A inline off
p-blue lead????
12 AWG 1 P-Blue
12 AWG 2 Black
12 AWG 3 P-Blue
20 AWG 4 Green
12 AWG 5 Yellow
12 AWG 6 Red
Voltage
Regulator
FWL
14 AWG
Note 12
12 AWG
ALT 5A
Note 4
S1
18 AWG
FWL
14 AWG
18 AWG
12 AWG
E-Bus
1 3 EFIS/EMS
2 7.5 Autopilot
3 5 Fuel Boost
4 7.5 Comm
5 5 GPS
6
7
8
9
Avionics
Master
Lndg/Taxi Light 10
Transponder 5
Aux Outlets 10
Strobe 7.5
Position Lights 7.5
Intercom 2
Cockpit Lights 2
Main Bus
1 5 Flaps (pullable)
2 2 Trim (pullable)
3 7.5 Starter (pullat 20 AWG
4
5
Master Switch
OFF/BAT/ALT
S700 2-10
PUSH FOR STARTER
22,000 uf 25 Volt
Computer grade
electrolytic
(note 20)
12 AWG
FWL
Charge
Warning
Light
PNL
1-3
Left Ign
Off/On
20 AWG Shielded (See Note 3)
Left Ignition
1-3
Right Ign
Off/On
20 AWG Shielded (See Note 3)
Right Ignition