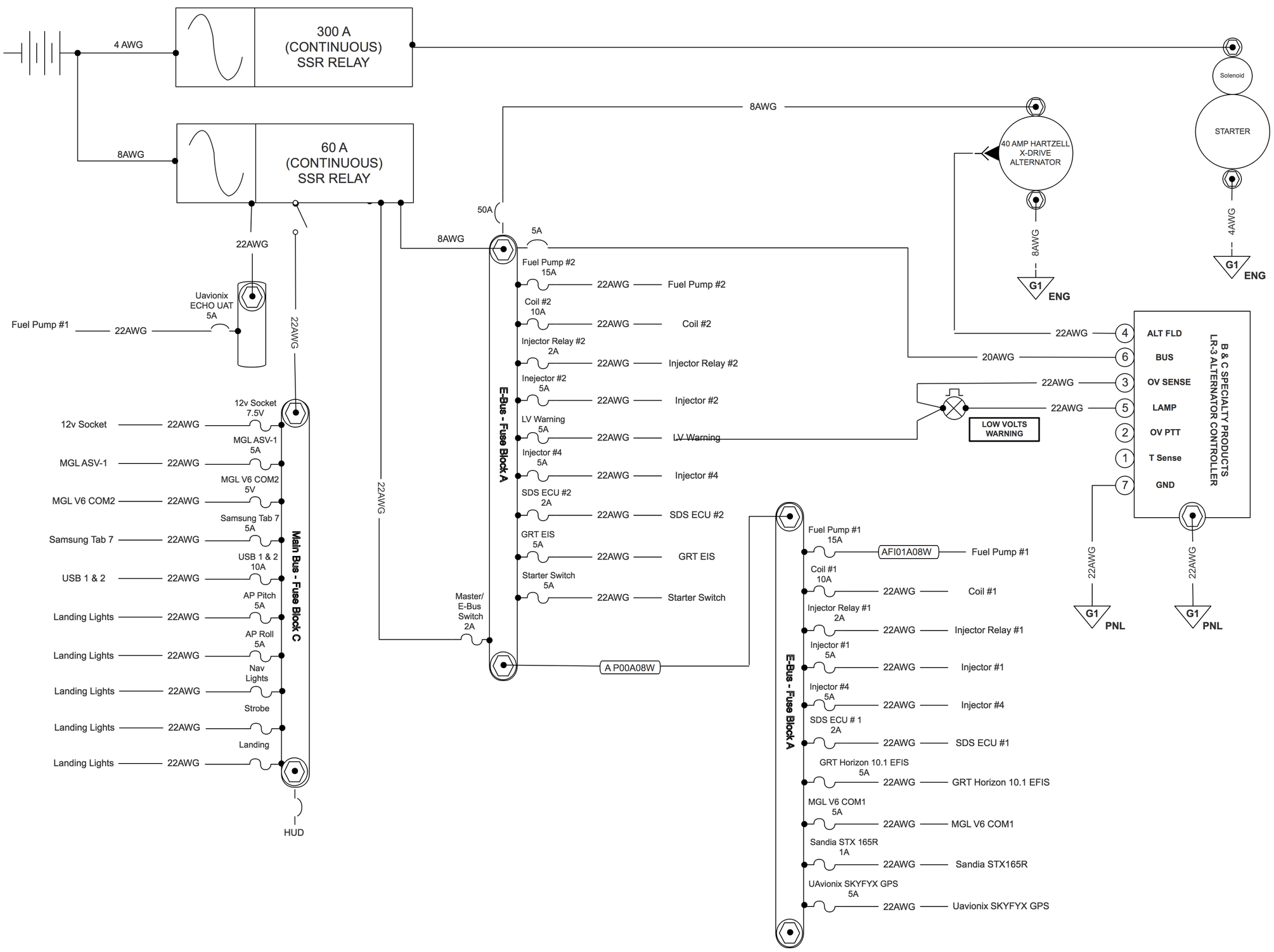
4 AWG
300 A
(CONTINUOUS)
SSR RELAY
8AWG
60 A
(CONTINUOUS)
SSR RELAY
Solenoid
STARTER
4AWG
G1
ENG
8AWG
40 AMP HARTZELL
X-DRIVE
ALTERNATOR
8AWG
G1
ENG
50A
5A
8AWG
22AWG
Uavionix
ECHO UAT
5A
Fuel Pump #1
22AWG
22AWG
Fuel Pump #2
15A
22AWG
Fuel Pump #2
Coil #2
10A
22AWG
Coil #2
Injector Relay #2
2A
22AWG
Injector Relay #2
Inejector #2
5A
22AWG
Injector #2
LV Warning
5A
22AWG
LV Warning
Injector #4
5A
22AWG
Injector #4
SDS ECU #2
2A
22AWG
SDS ECU #2
GRT EIS
5A
22AWG
GRT EIS
Starter Switch
5A
22AWG
Starter Switch
Master/
E-Bus
Switch
2A
A P00A08W
E-Bus - Fuse Block A
22AWG
22AWG
4
ALT FLD
6
BUS
3
OV SENSE
5
LAMP
2
OV PTT
1
T Sense
7
GND
B & C SPECIALTY PRODUCTS
LR-3 ALTERNATOR CONTROLLER
20AWG
LOW VOLTS
WARNING
22AWG
G1
PNL
22AWG
G1
PNL
12v Socket
7.5V
12v Socket
22AWG
MGL ASV-1
5A
MGL ASV-1
22AWG
MGL V6 COM2
5V
MGL V6 COM2
22AWG
Samsung Tab 7
5A
Samsung Tab 7
22AWG
USB 1 & 2
10A
USB 1 & 2
22AWG
AP Pitch
5A
Landing Lights
22AWG
AP Roll
5A
Landing Lights
22AWG
Nav
Lights
Landing Lights
22AWG
Strobe
Landing Lights
22AWG
Landing
Landing Lights
22AWG
Main Bus - Fuse Block C
HUD
Fuel Pump #1
15A
AFI01A08W
Fuel Pump #1
Coil #1
10A
22AWG
Coil #1
Injector Relay #1
2A
22AWG
Injector Relay #1
Injector #1
5A
22AWG
Injector #1
Injector #4
5A
22AWG
Injector #4
SDS ECU # 1
2A
22AWG
SDS ECU #1
GRT Horizon 10.1 EFIS
5A
22AWG
GRT Horizon 10.1 EFIS
MGL V6 COM1
5A
22AWG
MGL V6 COM1
Sandia STX 165R
1A
22AWG
Sandia STX165R
UAvionix SKYFYX GPS
5A
22AWG
Uavionix SKYFYX GPS
E-Bus - Fuse Block A