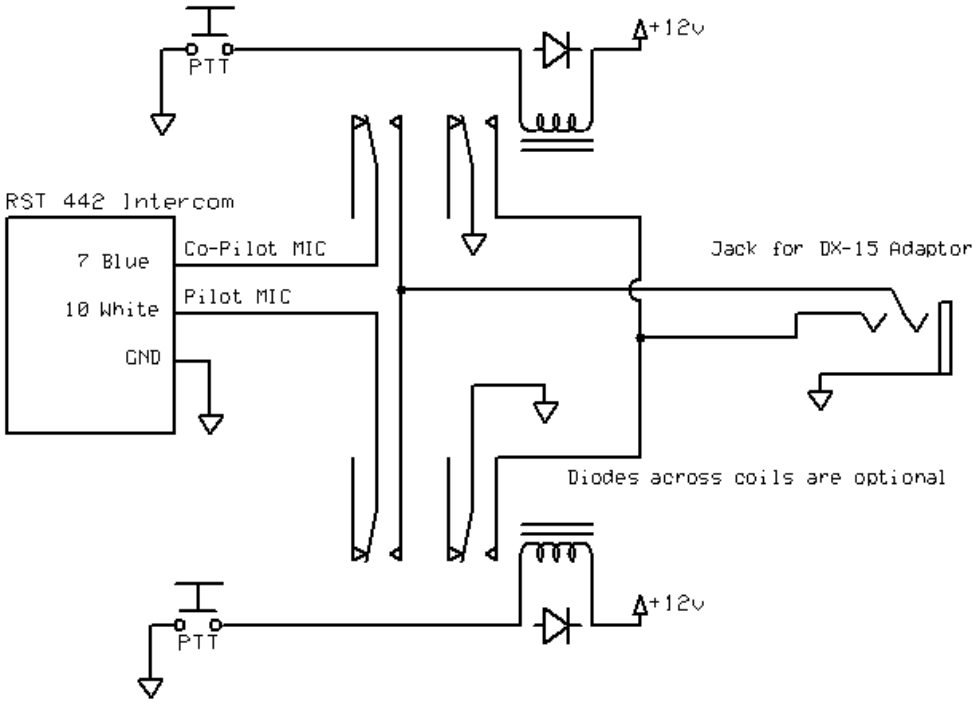
PTT
+12v
RST 442 Intercom
7 Blue
10 White
GND
Co-Pilot MIC
Pilot MIC
Jack for DX-15 Adaptor
Diodes across coils are optional
PTT
+12v