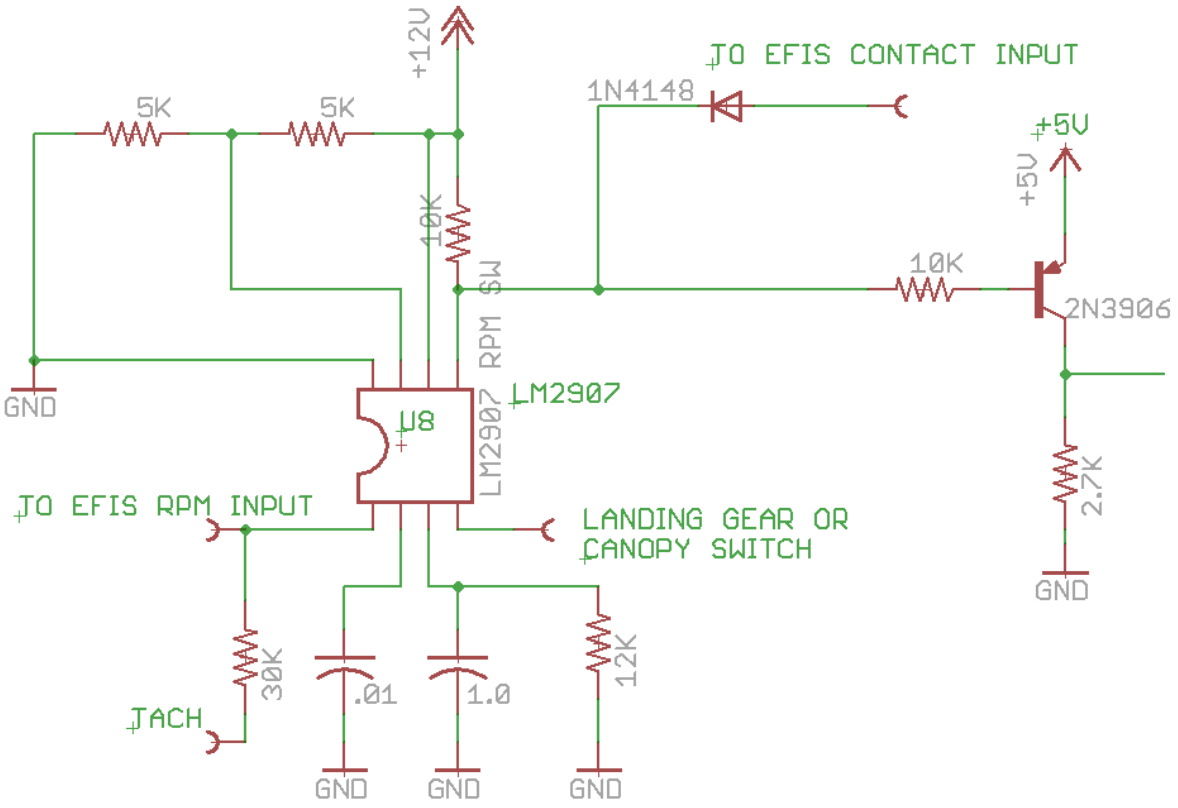
+12V
5K
5K
10K
RPM SW
GND
U8
LM2907
LM2907
TO EFIS RPM INPUT
30K
TACH
.01
1.0
12K
GND
GND
GND
LANDING GEAR OR
CANOPY SWITCH
1N4148
TO EFIS CONTACT INPUT
+5V
+5V
10K
2N3906
2.7K
GND