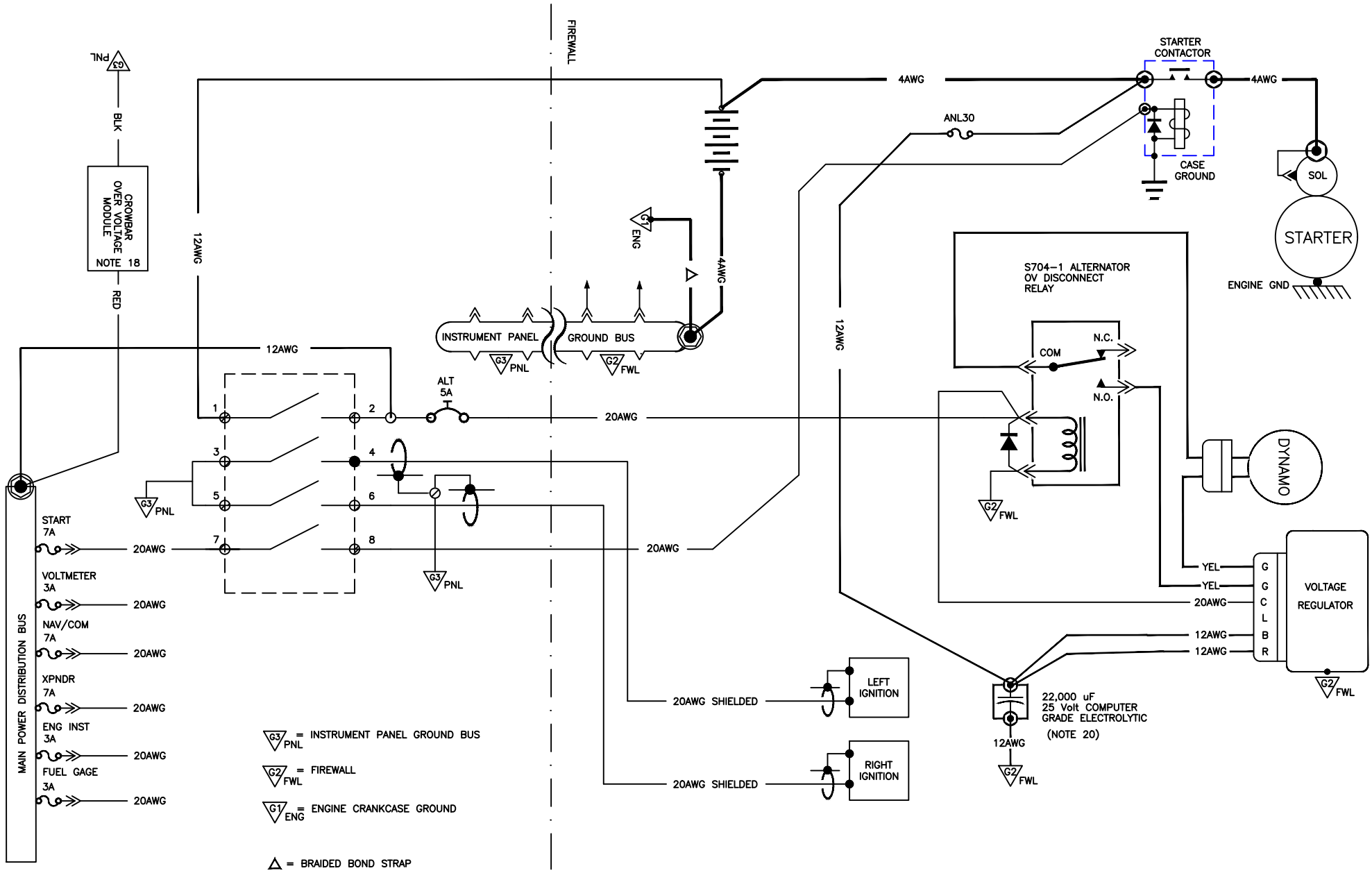

Electric System Aero101

REV -A- 07/10/20