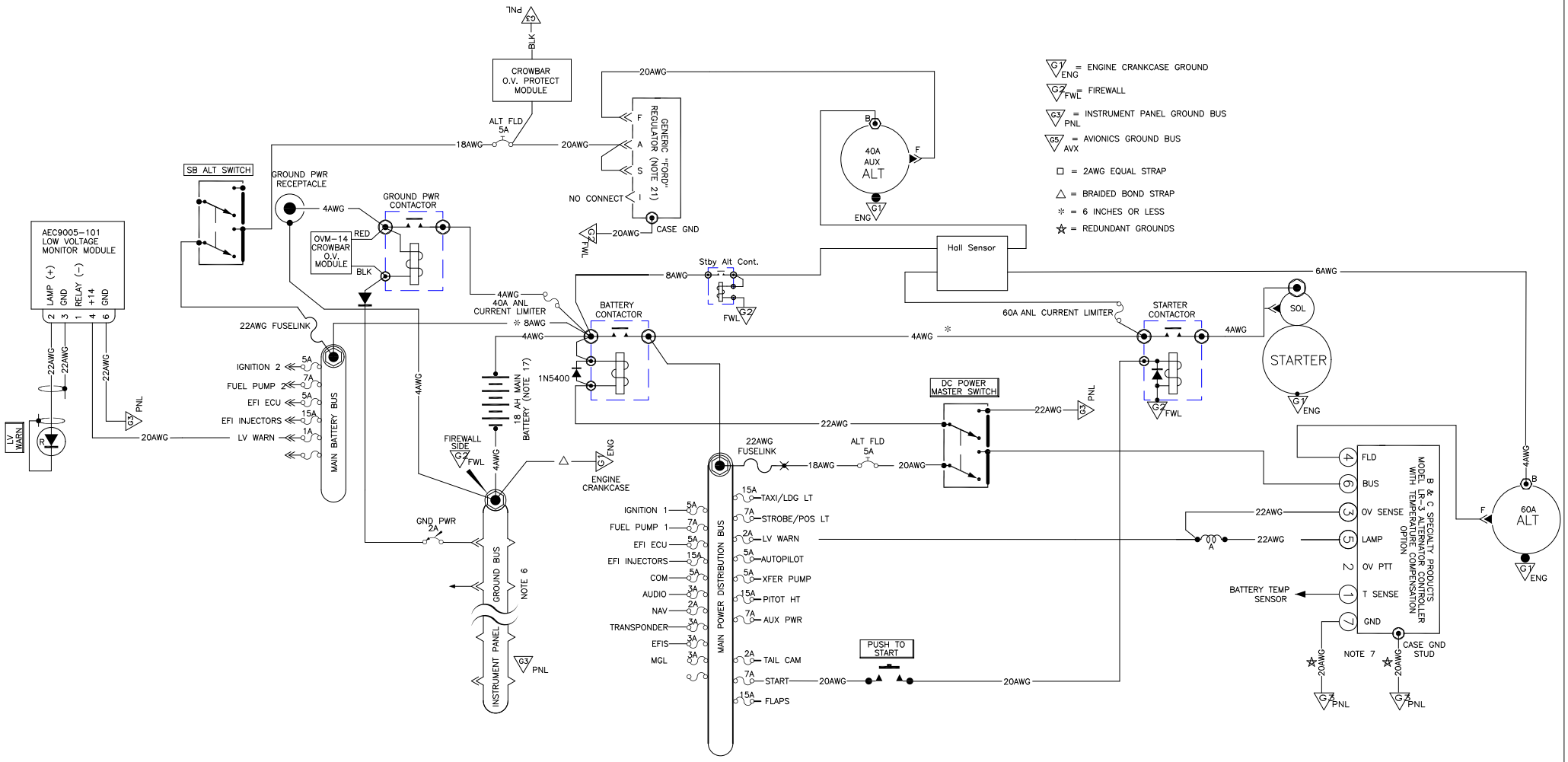
G1 ENG = ENGINE CRANKCASE GROUND
G2 FWL = FIREWALL
G3 PNL = INSTRUMENT PANEL GROUND BUS
G5 AVX = AVIONICS GROUND BUS
= 2AWG EQUAL STRAP
= BRAIDED BOND STRAP
✻ = 6 INCHES OR LESS
= REDUNDANT GROUNDS
AEC9005-101 LOW VOLTAGE MONITOR MODULE
LAMP (+)
GND
RELAY (-)
+14
GND
LV WARN
CROWBAR O.V. PROTECT MODULE
ALT FLD 5A
GENERIC "FORD" REGULATOR (NOTE 21)
NO CONNECT
CASE GND
40A AUX ALT
SB ALT SWITCH
GROUND PWR RECEPTACLE
GROUND PWR CONTACTOR
OVM-14 CROWBAR O.V. MODULE
RED
BLK
22AWG FUSELINK
MAIN BATTERY BUS
IGNITION 2
FUEL PUMP 2
EFI ECU
EFI INJECTORS
LV WARN
18 AH MAIN BATTERY (NOTE 17)
1N5400
40A ANL CURRENT LIMITER
BATTERY CONTACTOR
Stby Alt Cont.
Hall Sensor
60A ANL CURRENT LIMITER
STARTER CONTACTOR
SOL
STARTER
DC POWER MASTER SWITCH
FIREWALL SIDE
ENGINE CRANKCASE
GND PWR 2A
GROUND BUS
NOTE 6
INSTRUMENT PANEL
MAIN POWER DISTRIBUTION BUS
22AWG FUSELINK
ALT FLD 5A
IGNITION 1
FUEL PUMP 1
EFI ECU
EFI INJECTORS
COM
AUDIO
NAV
TRANSPONDER
EFIS
MGL
TAXI/LDG LT
STROBE/POS LT
LV WARN
AUTOPILOT
XFER PUMP
PITOT HT
AUX PWR
TAIL CAM
START
FLAPS
PUSH TO START
B & C SPECIALTY PRODUCTS MODEL LR-3 ALTERNATOR CONTROLLER WITH TEMPERATURE COMPENSATION OPTION
FLD
BUS
OV SENSE
LAMP
OV PTT
T SENSE
GND
BATTERY TEMP SENSOR
NOTE 7
CASE GND STUD
60A ALT

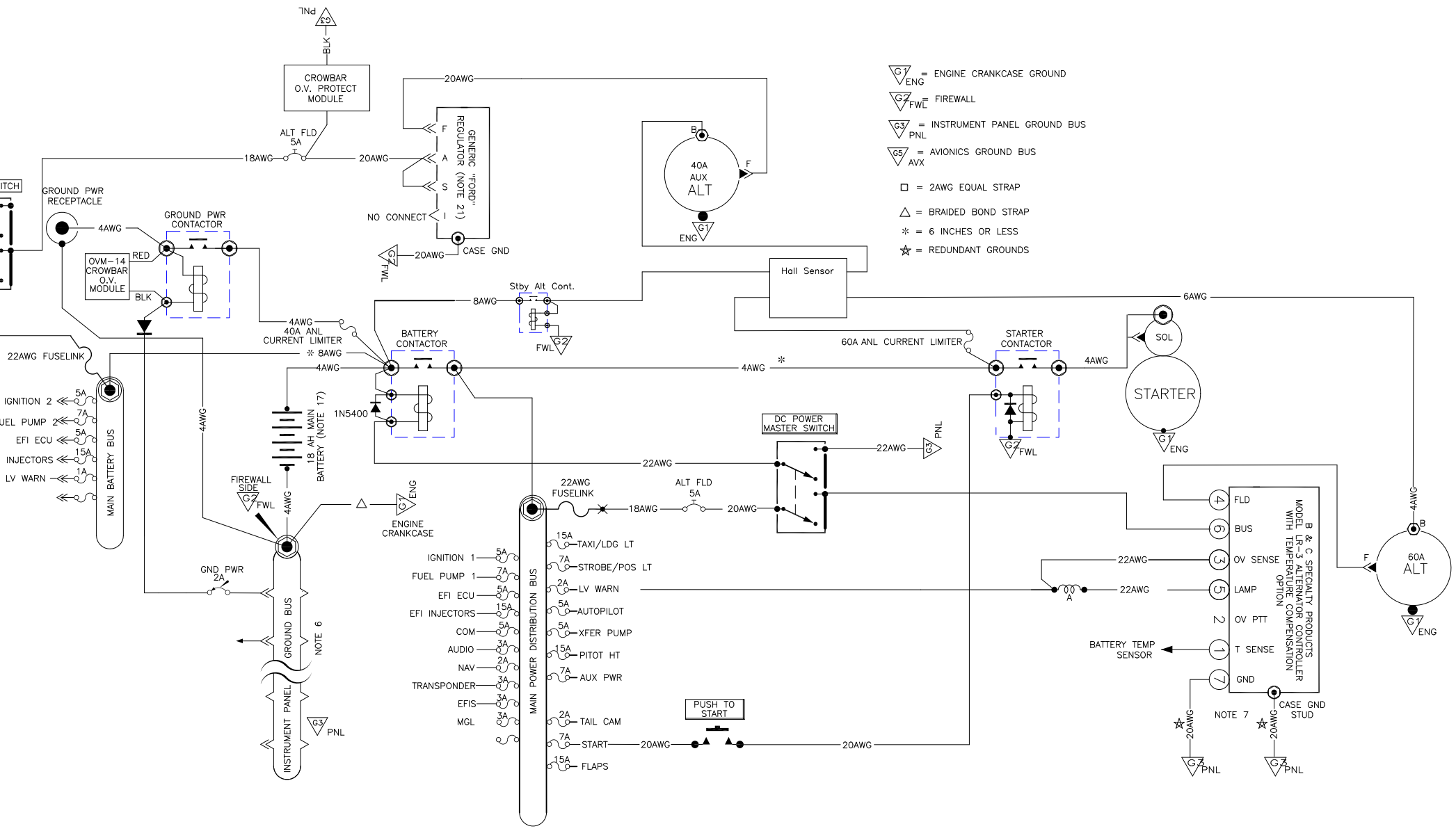
G1 ENG = ENGINE CRANKCASE GROUND
G2 FWL = FIREWALL
G3 PNL = INSTRUMENT PANEL GROUND BUS
G5 AVX = AVIONICS GROUND BUS
= 2AWG EQUAL STRAP
= BRAIDED BOND STRAP
* = 6 INCHES OR LESS
= REDUNDANT GROUNDS
CROWBAR O.V. PROTECT MODULE
ALT FLD 5A
18AWG
20AWG
GENERIC "FORD" REGULATOR (NOTE 21)
F
A
S
I
NO CONNECT
CASE GND
40A AUX ALT
B
F
ENG
Hall Sensor
6AWG
GROUND PWR RECEPTACLE
4AWG
GROUND PWR CONTACTOR
OVM-14 CROWBAR O.V. MODULE
RED
BLK
Stby Alt Cont.
8AWG
FWL
4AWG 40A ANL CURRENT LIMITER
* 8AWG
BATTERY CONTACTOR
22AWG FUSELINK
4AWG
1N5400
18 AH MAIN BATTERY (NOTE 17)
60A ANL CURRENT LIMITER
STARTER CONTACTOR
SOL
STARTER
DC POWER MASTER SWITCH
22AWG
PNL
IGNITION 2 5A
FUEL PUMP 2 7A
EFI ECU 5A
INJECTORS 15A
LV WARN 1A
MAIN BATTERY BUS
FIREWALL SIDE
ENGINE CRANKCASE
22AWG FUSELINK
ALT FLD 5A
GND PWR 2A
GROUND BUS
NOTE 6
INSTRUMENT PANEL
IGNITION 1 5A
FUEL PUMP 1 7A
EFI ECU 5A
EFI INJECTORS 15A
COM 5A
AUDIO 3A
NAV 2A
TRANSPONDER 3A
EFIS 3A
MGL 3A
MAIN POWER DISTRIBUTION BUS
15A TAXI/LDG LT
7A STROBE/POS LT
2A LV WARN
5A AUTOPILOT
5A XFER PUMP
15A PITOT HT
7A AUX PWR
2A TAIL CAM
7A START
15A FLAPS
PUSH TO START
B & C SPECIALTY PRODUCTS MODEL LR-3 ALTERNATOR CONTROLLER WITH TEMPERATURE COMPENSATION OPTION
FLD
BUS
OV SENSE
LAMP
OV PTT
T SENSE
GND
BATTERY TEMP SENSOR
NOTE 7
CASE GND STUD
60A ALT