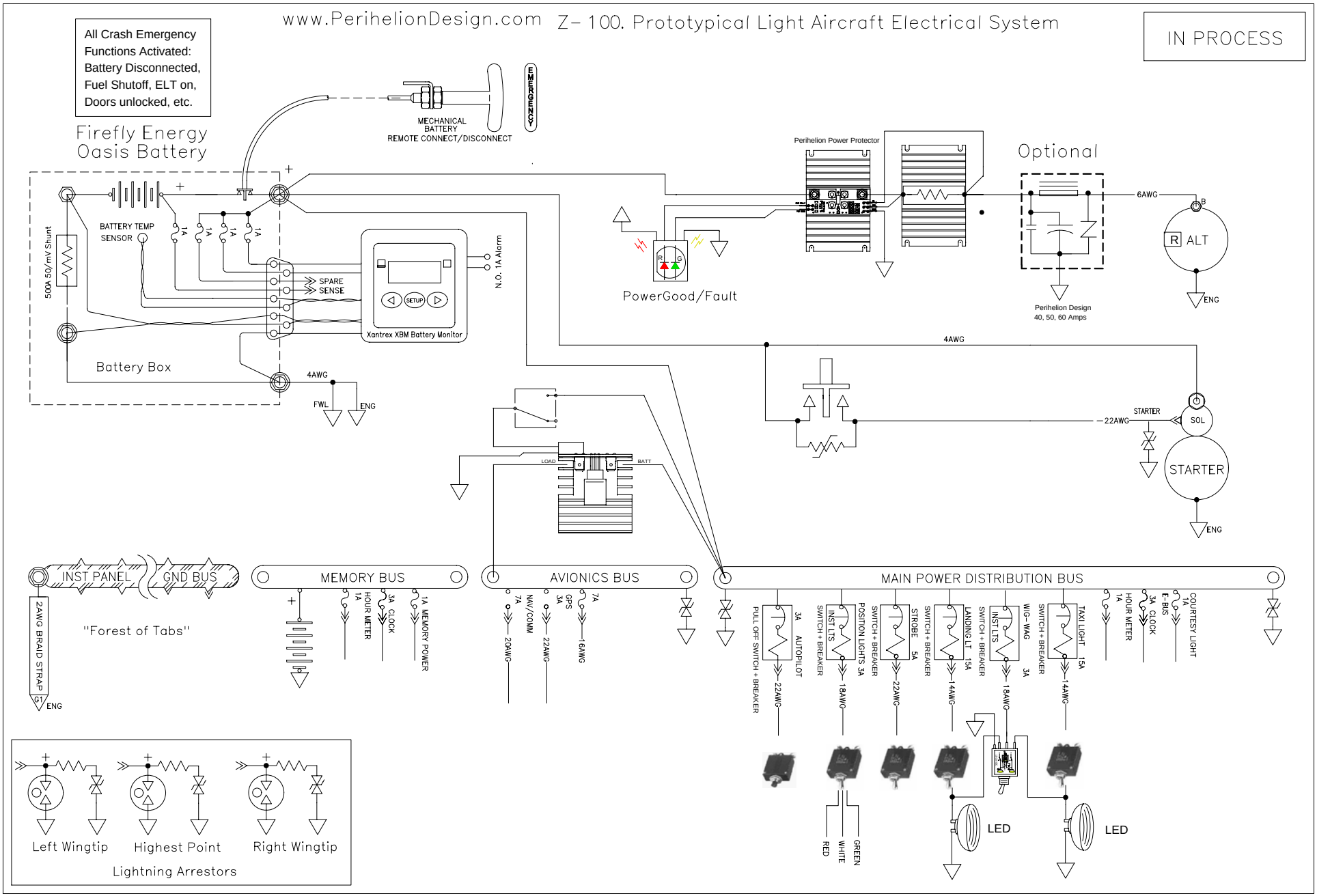
www.PerihelionDesign.com Z-100. Prototypical Light Aircraft Electrical System
IN PROCESS
All Crash Emergency Functions Activated: Battery Disconnected, Fuel Shutoff, ELT on, Doors unlocked, etc.
Firefly Energy Oasis Battery
MECHANICAL BATTERY REMOTE CONNECT/DISCONNECT
EMERGENCY
BATTERY TEMP SENSOR
500A 50/mV Shunt
1A
SPARE
SENSE
SETUP
Xantrex XBM Battery Monitor
N.O. 1A Alarm
Battery Box
4AWG
FWL
ENG
Perihelion Power Protector
PowerGood/Fault
Optional
6AWG
B
R ALT
ENG
Perihelion Design 40, 50, 60 Amps
4AWG
22AWG
STARTER
SOL
STARTER
ENG
LOAD
BATT
INST PANEL
GND BUS
2AWG BRAID STRAP
G1
ENG
"Forest of Tabs"
MEMORY BUS
HOUR METER 1A
CLOCK 3A
MEMORY POWER 1A
AVIONICS BUS
NAV/COMM 7A
20AWG
GPS 3A
22AWG
7A
16AWG
MAIN POWER DISTRIBUTION BUS
PULL OFF SWITCH + BREAKER
AUTOPILOT 3A
22AWG
SWITCH + BREAKER
INST LTS
18AWG
POSITION LIGHTS 3A
SWITCH + BREAKER
STROBE 5A
22AWG
SWITCH + BREAKER
LANDING LT 15A
14AWG
SWITCH + BREAKER
INST LTS
3A
18AWG
WIG-WAG
SWITCH + BREAKER
TAXI LIGHT 15A
14AWG
HOUR METER 1A
CLOCK 3A
E-BUS 1A
COURTESY LIGHT
RED
WHITE
GREEN
LED
LED
Left Wingtip
Highest Point
Right Wingtip
Lightning Arrestors