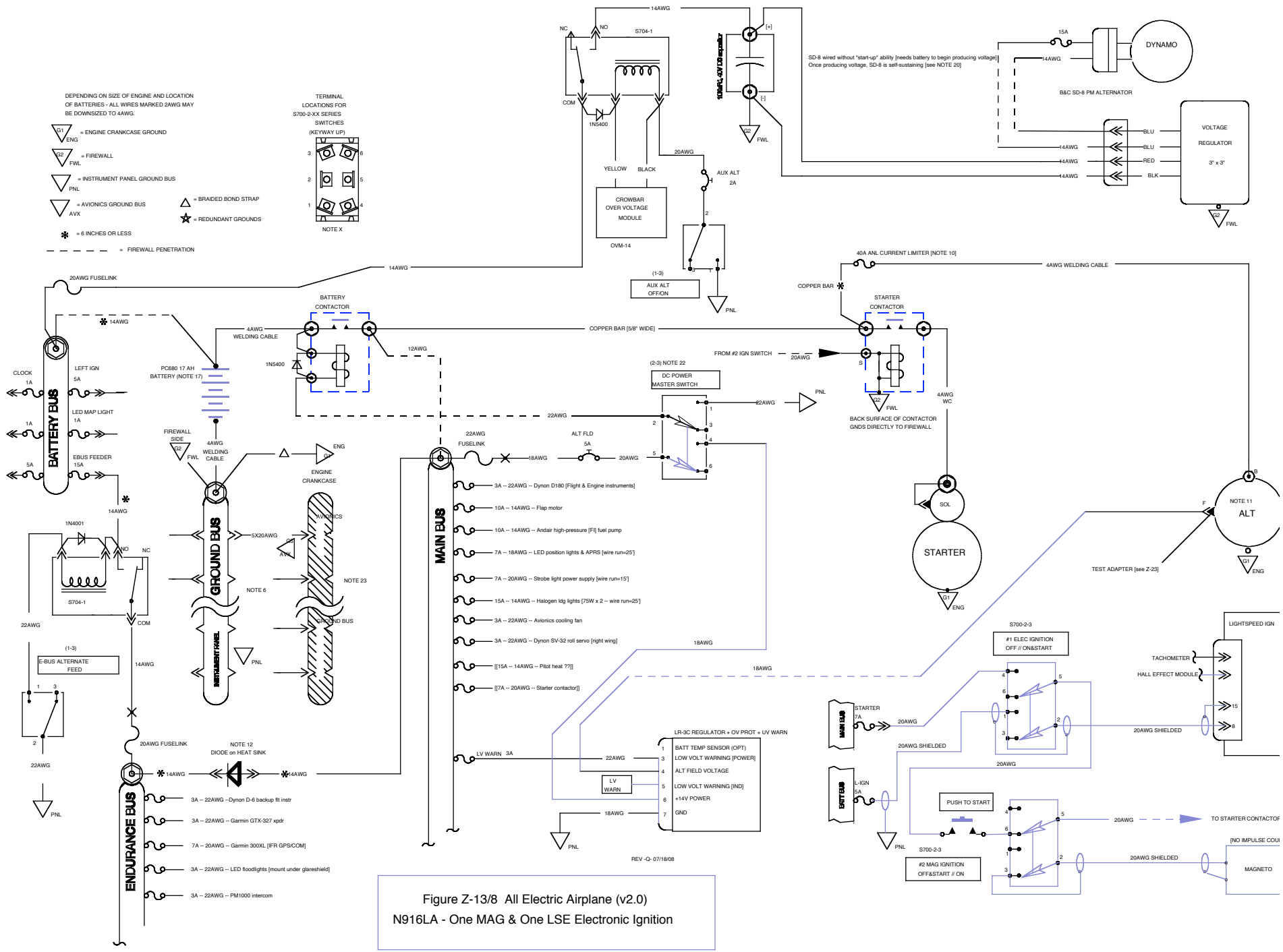

Figure Z-13/8 All Electric Airplane (v2.0)

N916LA - One MAG & One LSE Electronic Ignition

)

]

PLER]

]