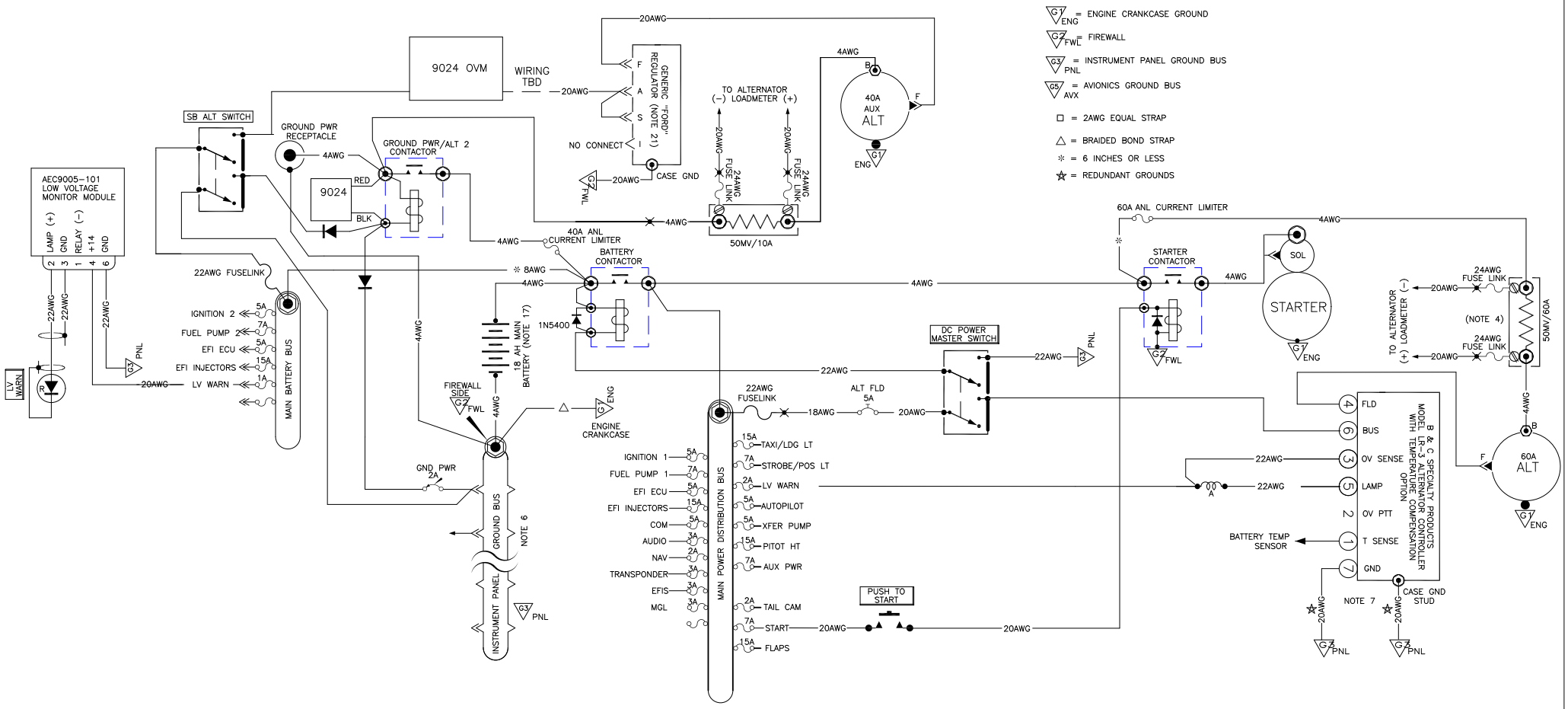
G1 ENG = ENGINE CRANKCASE GROUND
G2 FWL = FIREWALL
G3 PNL = INSTRUMENT PANEL GROUND BUS
G5 AVX = AVIONICS GROUND BUS
= 2AWG EQUAL STRAP
= BRAIDED BOND STRAP
* = 6 INCHES OR LESS
= REDUNDANT GROUNDS
9024 OVM
WIRING TBD
20AWG
GENERIC "FORD" REGULATOR (NOTE 21)
F
A
S
I
NO CONNECT
CASE GND
TO ALTERNATOR (-) LOADMETER (+)
24AWG FUSE LINK
50MV/10A
4AWG
40A AUX ALT
B
F
ENG
SB ALT SWITCH
GROUND PWR RECEPTACLE
GROUND PWR/ALT 2 CONTACTOR
9024
RED
BLK
AEC9005-101 LOW VOLTAGE MONITOR MODULE
LAMP (+)
GND
RELAY (-)
+14
GND
2
3
1
4
6
22AWG
LV WARN
PNL
22AWG FUSELINK
MAIN BATTERY BUS
IGNITION 2 5A
FUEL PUMP 2 7A
EFI ECU 5A
EFI INJECTORS 15A
LV WARN 1A
40A ANL CURRENT LIMITER
BATTERY CONTACTOR
* 8AWG
1N5400
18 AH MAIN BATTERY (NOTE 17)
FIREWALL SIDE
ENGINE CRANKCASE
GND PWR 2A
GROUND BUS
NOTE 6
INSTRUMENT PANEL
22AWG FUSELINK
18AWG
ALT FLD 5A
DC POWER MASTER SWITCH
MAIN POWER DISTRIBUTION BUS
IGNITION 1 5A
FUEL PUMP 1 7A
EFI ECU 5A
EFI INJECTORS 15A
COM 5A
AUDIO 3A
NAV 2A
TRANSPONDER 3A
EFIS 3A
MGL 3A
15A TAXI/LDG LT
7A STROBE/POS LT
2A LV WARN
5A AUTOPILOT
5A XFER PUMP
15A PITOT HT
7A AUX PWR
2A TAIL CAM
7A START
15A FLAPS
PUSH TO START
60A ANL CURRENT LIMITER
STARTER CONTACTOR
SOL
STARTER
TO ALTERNATOR (+) LOADMETER (-)
(NOTE 4)
50MV/60A
60A ALT
B & C SPECIALTY PRODUCTS MODEL LR-3 ALTERNATOR CONTROLLER WITH TEMPERATURE COMPENSATION OPTION
FLD
BUS
OV SENSE
LAMP
OV PTT
T SENSE
GND
BATTERY TEMP SENSOR
NOTE 7
CASE GND STUD

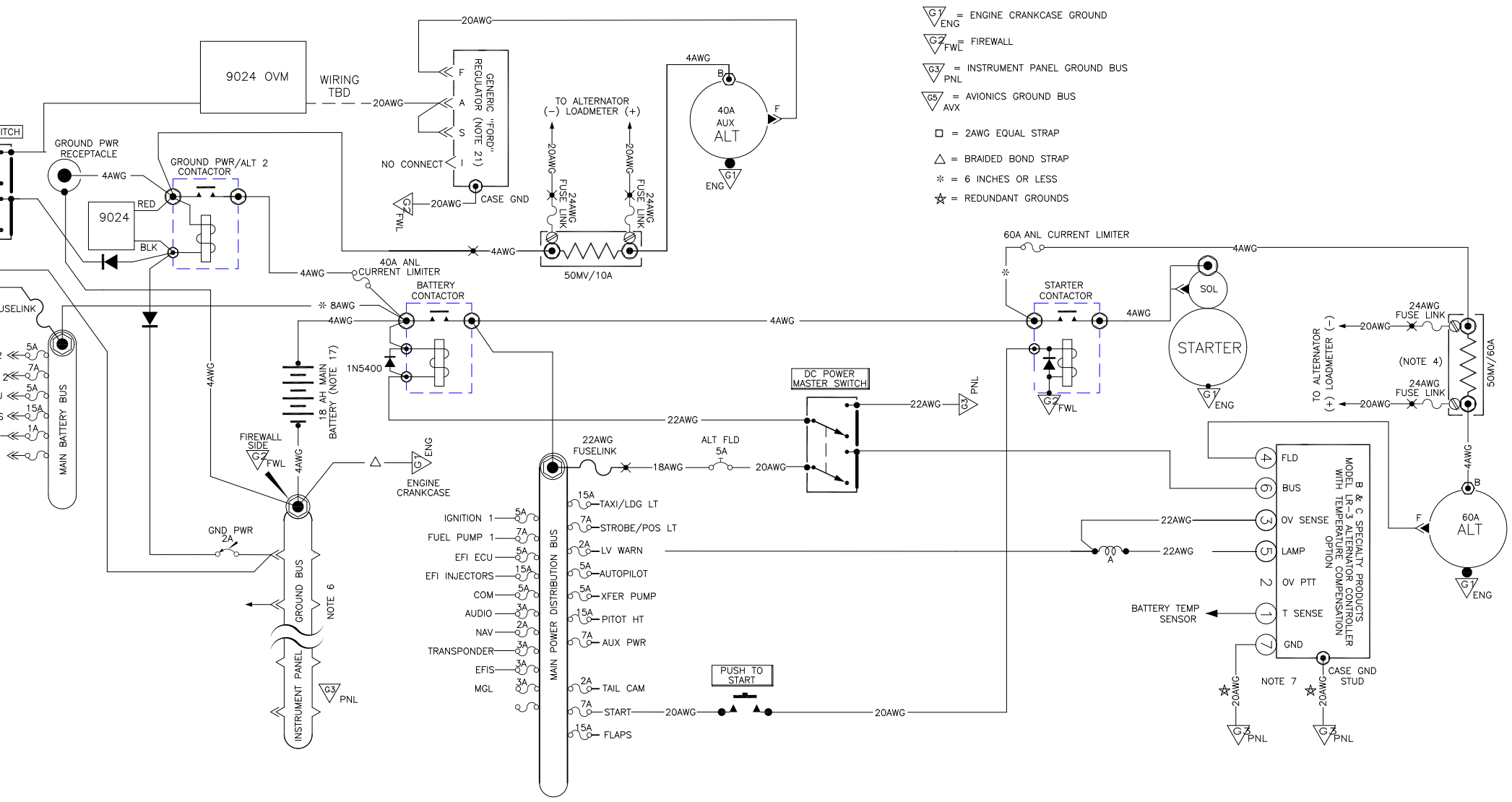
G1 ENG = ENGINE CRANKCASE GROUND
G2 FWL = FIREWALL
G3 PNL = INSTRUMENT PANEL GROUND BUS
G5 AVX = AVIONICS GROUND BUS
= 2AWG EQUAL STRAP
= BRAIDED BOND STRAP
* = 6 INCHES OR LESS
= REDUNDANT GROUNDS
9024 OVM
WIRING TBD
20AWG
GENERIC "FORD" REGULATOR (NOTE 21)
F
A
S
I
NO CONNECT
CASE GND
G2 FWL
TO ALTERNATOR (−) LOADMETER (+)
20AWG
24AWG FUSE LINK
50MV/10A
4AWG
40A AUX ALT
B
F
G1 ENG
GROUND PWR RECEPTACLE
GROUND PWR/ALT 2 CONTACTOR
9024
RED
BLK
40A ANL CURRENT LIMITER
BATTERY CONTACTOR
8AWG
1N5400
18 AH MAIN BATTERY (NOTE 17)
MAIN BATTERY BUS
USELINK
5A
7A
15A
1A
FIREWALL SIDE
G2 FWL
ENGINE CRANKCASE
G1 ENG
GND PWR
2A
GROUND BUS
NOTE 6
INSTRUMENT PANEL
G3 PNL
22AWG FUSELINK
18AWG
ALT FLD 5A
20AWG
22AWG
DC POWER MASTER SWITCH
G3 PNL
MAIN POWER DISTRIBUTION BUS
IGNITION 1
FUEL PUMP 1
EFI ECU
EFI INJECTORS
COM
AUDIO
NAV
TRANSPONDER
EFIS
MGL
TAXI/LDG LT
STROBE/POS LT
LV WARN
AUTOPILOT
XFER PUMP
PITOT HT
AUX PWR
TAIL CAM
START
FLAPS
PUSH TO START
60A ANL CURRENT LIMITER
STARTER CONTACTOR
SOL
STARTER
G1 ENG
TO ALTERNATOR (−) LOADMETER (+)
24AWG FUSE LINK
(NOTE 4)
50MV/60A
60A ALT
B & C SPECIALTY PRODUCTS MODEL LR-3 ALTERNATOR CONTROLLER WITH TEMPERATURE COMPENSATION OPTION
FLD
BUS
OV SENSE
LAMP
OV PTT
T SENSE
GND
BATTERY TEMP SENSOR
NOTE 7
CASE GND STUD