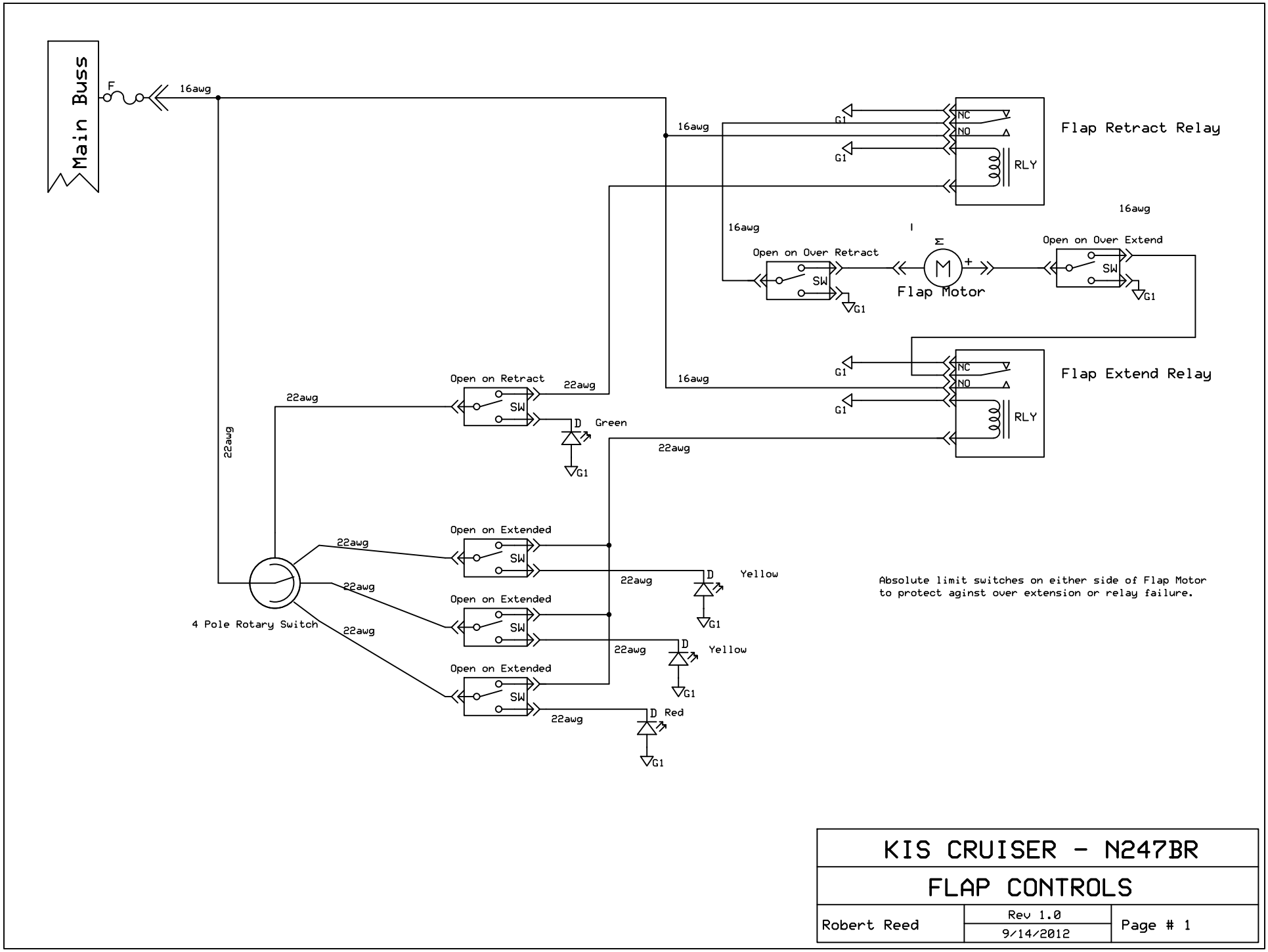
Main Buss
F
16awg
16awg
G1
NC
NO
RLY
Flap Retract Relay
16awg
16awg
Open on Over Retract
SW
G1
M
Flap Motor
Open on Over Extend
SW
G1
Flap Extend Relay
Open on Retract
22awg
22awg
SW
D
Green
G1
22awg
22awg
Open on Extended
SW
22awg
D
Yellow
G1
4 Pole Rotary Switch
22awg
Open on Extended
SW
22awg
D
Yellow
G1
22awg
Open on Extended
SW
22awg
D
Red
G1
Absolute limit switches on either side of Flap Motor
to protect aginst over extension or relay failure.
KIS CRUISER - N247BR
FLAP CONTROLS
Robert Reed
Rev 1.0
9/14/2012
Page # 1