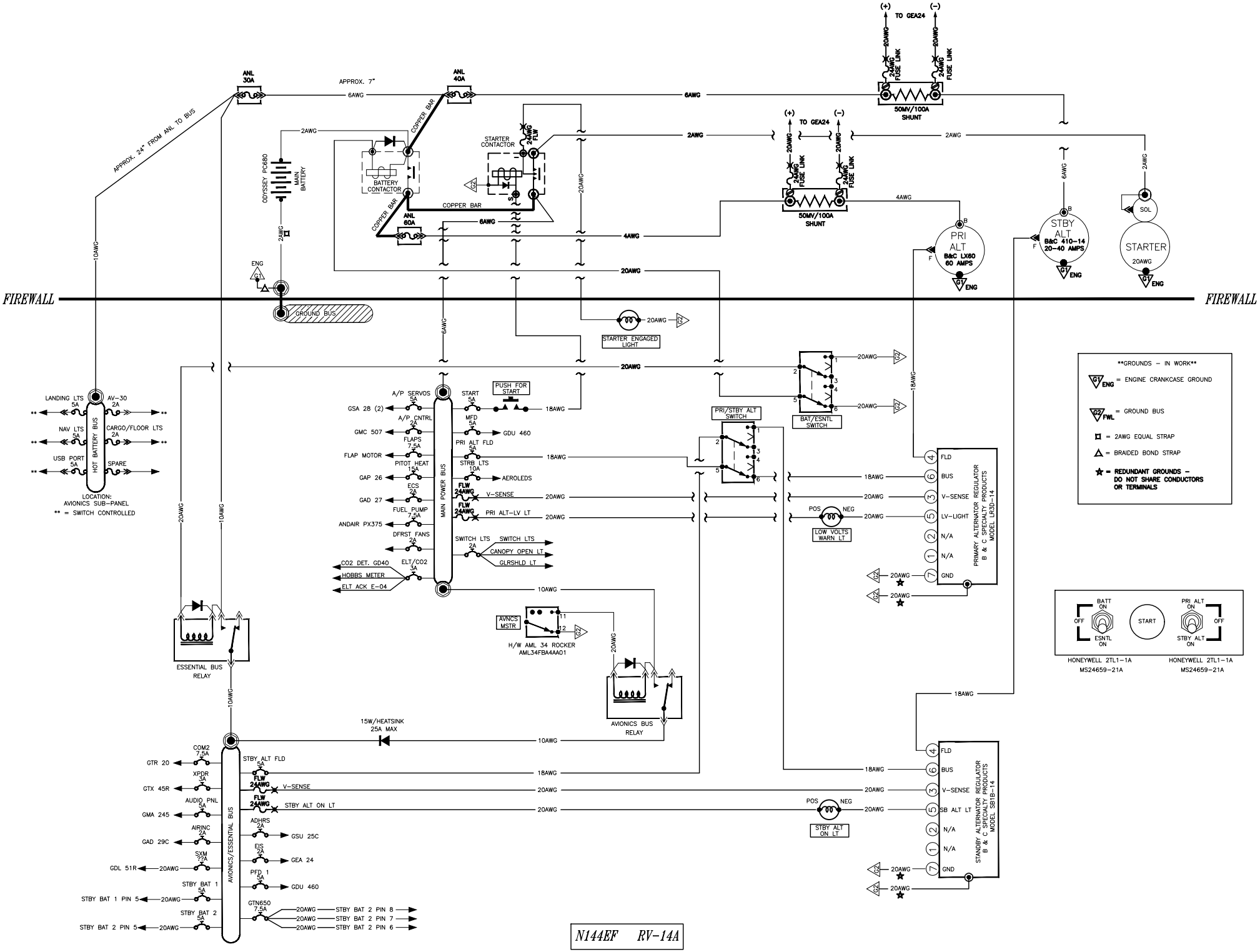

N144EF RV-14A

PRIMARY POWER SYSTEM -IN WORK- REV 02/16/23