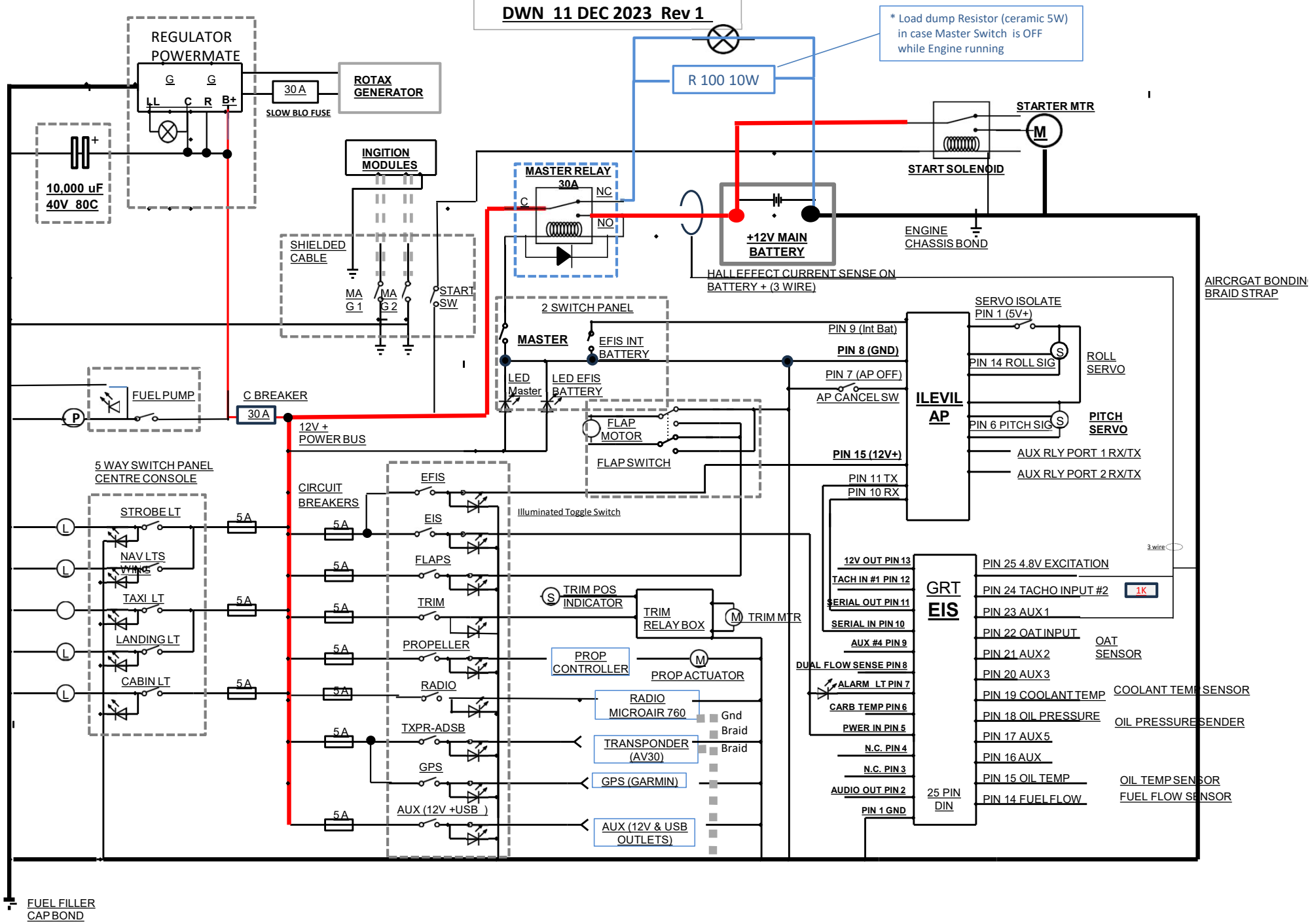ELECTRICAL WIRING DIAGRAM
EUROPA 19-4301
DWN 11 DEC 2023 Rev 1